Dynamic Analysis and Control Design of Optocoupler-Isolated LLC Series Resonant Converters with Wide Input and Load Variations

Jinhaeng Jang*, Minjae Joung, Byungcho Choi, and Heung-geun Kim
School of Electrical Engineering and Computer Science
Kyungpook National University
Taegu, Korea
*Educational leave from LG Electronics
Gumi, Korea, lgjjh@lge.com

Abstract -- LLC series resonant converters for consumer or industrial electronics frequently encounter considerable changes in both input voltage and load current requirements. This paper presents theoretical and practical details involved with the dynamic analysis and control design of LLC series resonant dc-to-dc converters operating with wide input and load variations. The accuracy of dynamic analysis and validity of control design are confirmed with both computer simulations and experimental measurements.

Index--LLC series resonant converter, Feedback compensation, Dynamic analysis, Optocoupler feedback, Closed-loop performance.

I. Introduction

LLC series resonant converters are popularly adapted to consumer or industrial electronics due to their inherent advantages over contending topologies [1-4]. In these applications, LLC resonant converters often confront wide variations in both input voltage and load current. For example, the LLC dc-to-dc converter employed to large-screen LCD TV sets receives the input from a power factor corrected rectifier whose output voltage can be widely changed due to sagging and swelling in the line voltage. The LLC dc-to-dc converter provides a fixed output voltage for the inverter circuit downstream, which in turn drives a number of cold cathode fluorescent lamps (CCFLs). The inverter circuit draws the load current which could also change considerably depending on the illumination level of CCFLs.

It is well known [5-7] that the small-signal dynamics of LLC resonant converters drift substantially as the operating conditions are altered. Accordingly, it is quite possible that an LLC converter showing satisfactory performance at one operating condition could become unacceptable or even unstable when the operating conditions are changed. Indeed, the control design of the resonant converters for practical applications is particularly challenging because of the strong dependency of the converter dynamics on the operating conditions. While the small-signal analysis of LLC resonant converters was covered in the previous publications [6, 7], the control design under widely varying operating conditions has not been reported in open literatures.

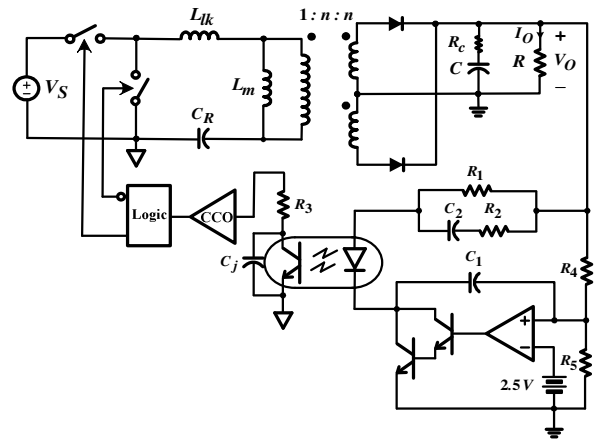

Fig. 1 Optocoupler-isolated LLC series resonant converter: $V_S = 340 \sim 390V$, $V_O = 24V$, $I_O = 1 \sim 6A$, $C_R : 47nF$, $L_{lk} = 160\mu H$, $L_m = 1.24mH$, $n = 0.14$, $C = 2mF$, $R_c = 15m\Omega$, $R_1 = 6.8k\Omega$, $C_1 = 82nF$, $R_2 = 300\Omega$, $C_2 = 33nF$, $R_3 = 2.7k\Omega$, $R_4 = 1.8k\Omega$, $R_5 = 210\Omega$, *CCO gain:* $0.34\,MHz/1\,mA$, C_j : *Optocoupler junction capacitor*

In addition, LLC resonant converters for consumer electronics commonly employ an optocoupler to their feedback circuit, in order to accommodate the input-output isolation requirement. Thus, the control design should incorporate the circuit properties of the optocoupler, which could also vary with the converter operating conditions.

This paper deals with the dynamic analysis and control design of optocoupler-isolated LLC series resonant converters, operating at the presence of wide variations in both input voltage and load current. While an LLC resonant converter designed for a specific application is used to illustrate the technical issues, the results can be extended to most LLC converters for consumer and industrial applications.

This work is the outcome of a Manpower Development Program for Energy & Resources, supported by the Ministry of Knowledge and Economy (MKE), Korea.

Authorized licensed use limited to: NATIONAL YUNLIN UNIV OF TECH. Downloaded on December 11, 2009 at 11:47 from IEEE Xplore. Restrictions apply.

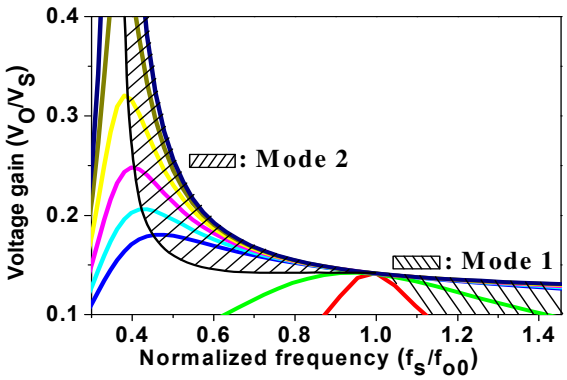

Fig. 2 Operational mode.

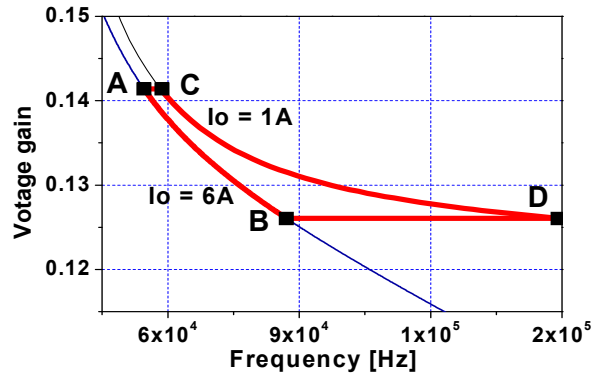

Fig. 3 Operational region.

First, the small-signal dynamics of LLC converters are analyzed in order to illustrate the control design strategy at the presence of wide variations in operating conditions.

A simple method to measure the circuit parameters of the optocoupler is introduced. Second, the structure for the feedback compensation is discussed, which could offer stability and satisfactory closed-loop performance for the entire input/load range. Then, the compensation design for the optocoupler-isolated voltage feedback circuit is discussed. Finally, the closed-loop performance of the LLC converter is investigated for all operating conditions, in order to validate the control design and demonstrate the converter performance under different operating conditions. Analytical predictions are demonstrated by computer simulations and verified by experimental measurements.

II. LLC SERIES RESONANT CONVERTER

A. Circuit Configuration

Fig. 1 shows a simplified circuit diagram of an LLC series resonant converter designed for a 37" LCD TV set. The converter receives a 340~390 V input from a front-end power factor corrected rectifier and provides a 24 V output to the CCFL inverter downstream. While the nominal load current is 6 A, it can occasionally be reduced to 1 A when the CCFL inverter is in dimming mode. A half-bridge circuit is configured using MOSFET switches, three-winding transformer, and center-tapped rectifier. An LLC resonant tank is formed by adding one resonant capacitor C_r to the leakage inductance L_{lk} and magnetizing inductance L_m of the three-winding transformer.

The converter employs standard frequency control with an output voltage feedback. The optocoupler is combined with a shunt regulator-type error amplifier to implement a low-cost isolated voltage feedback controller. The output of the voltage feedback compensation is fed to the current controlled oscillator (CCO) to generate variable-frequency switch drive signals.

A three-pole two-zero compensation circuit, which offers good closed-loop performance for resonant converters [7], is formed around the error amplifier and optocoupler.

B. Operational Mode and Operational Region

It has been shown [7] that the small-signal dynamics of LLC converters show two different characteristic patterns, referred to as the operational mode. The operational mode is illustrated in Fig. 2, where a family of input-to-output voltage gain curves are shown, each with a different load condition. Based on the location of the operating point in Fig. 2, the converter operational mode is classified as Mode 1 and Mode 2:

- Mode 1 refers to the converter operation in the region where $f_s \rangle f_{o0}$ with f_s representing the switching frequency of the converter and $f_{o0} = 1/\left(2\pi\sqrt{C_r L_{lk}}\right)$ denoting the short-circuit resonant frequency of LLC tank.
- Mode 2 refers to the converter operation in the region where $f_{o\infty} < f_s < f_{o0}$ with $f_{o\infty} = 1/\left(2\pi\sqrt{C_r(L_{lk}+L_m)}\right)$ denoting the open-circuit resonant frequency of LLC tank and, at the same time, the voltage gain has a decreasing slope in that region.

In Mode 1, the converter dynamics are very similar to those of a conventional LC series resonant converter whose resonant tank is formed by C_r and L_{lk}; the reactance of L_m is much larger than the reactance of the other circuit components and thus only causes negligible impacts on the tank dynamics. On the other hand, in Mode 2, the reactance of L_m becomes comparable with the other reactive components, C_r and L_{lk}, starts to influence the tank characteristics, resulting in the small-signal dynamics markedly different from those of Mode 1. The distinctive

Authorized licensed use limited to: NATIONAL YUNLIN UNIV OF TECH. Downloaded on December 11, 2009 at 11:47 from IEEE Xplore. Restrictions apply.

small-signal dynamics in Mode 1 and Mode 2 will be discussed in III.

For the given input/load specifications, the operational region of the LLC converter can also be defined on the voltage gain curves. Fig. 3 shows the region in which the operating point of the LLC converter could locate for the given input/load condition; two horizontal lines are drawn for the input voltage variation, while two gain curves are determined from the load current requirement. On the operational region, the four extreme operating points (Point A, B, C, and D) are shown. Referring to Fig. 2, Point A and C belong to Mode 2, while Point B and D are in Mode 1. For the given LLC converter, the operating point normally lies on the curve between Point A and B; i.e., $V_S = 340 \sim 390V$ with $I_O = 6A$. Accordingly, the dynamic analysis and control design will be mainly focused on Point A and B. However, the converter performance will be evaluated for the entire operational region.

Fig. 3 reveals the characteristic features of the LLC converter. Compared to conventional LC series resonant converters, the LLC converter has a rather elongated operational region, resulting in the following consequences. First, the switching frequency varies in a wide range covering from 50 kHz to 150 kHz. Second, the slope of the voltage gain curve changes considerably within the operational region; the slope is very steep at Point A, while the gain curve is noticeably flat at Point D. Third, the operational region spans both Mode 1 (Point B and D) and Mode 2 (Point A and C). In particular, Point D lies deep inside Mode 1. As will be illustrated in III and IV, all of these characteristics complicate the small-signal analysis and control design of LLC converters, compared with conventional LC series resonant converters.

III. DESIGN-ORIENTED SMALL-SIGNAL ANALYSIS

A. Frequency-to-Output Transfer Function

In general, higher-order polynomials are necessary to accurately represent small-signal transfer functions of resonant converters. However, some of the transfer function poles appear at very high frequencies - far beyond the control bandwidth- and the frequency-to-output transfer function thus can be approximated by a third order polynomial [7]

$$G_{vf}(s) \approx \frac{K_{vf}\left(1+\frac{s}{\omega_{esr}}\right)}{\left(1+\frac{s}{Q\omega_o}+\frac{s^2}{\omega_o^2}\right)\left(1+\frac{s}{\omega_{pl}}\right)} \tag{1}$$

- The low frequency gain K_{vf} is proportional to the slope of the voltage gain curve at the operating point.

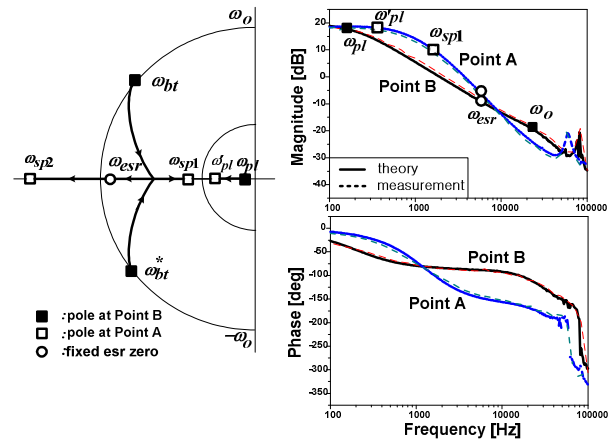

(a) (b)

Fig. 4 Power stage dynamics. (a) Pole/zero trajectory of frequency-to-output transfer function; from Point B to A. (b) Control-to-output transfer functions at Point A and B.

- The damping factor Q and pole frequency ω_o of the quadratic factor both vary with the converter operational condition. The quadratic term could introduce either a double pole or two real poles, thereby significantly affecting the power stage dynamics. When the double pole appears, its frequency is approximately given by $\omega_o \approx |\omega_{o0} - \omega_s|$. This double pole frequency is called the beat frequency [5].
- The low-frequency pole ω_{pl}, originated from the output filter stage, also moves around as the converter operating condition is varied.
- The esr zero, $\omega_{esr} = 1/(CR_c)$, appears at a fixed frequency.

B. Time-Domain Simulation Method

There are several analytical methods that are applicable to the small-signal modeling of resonant dc-to-dc converters, such as the generalized averaging method [8,9] and the simplified describing function method [10,11]. These methods were successfully adapted to the modeling of LC series resonant converters. However, when applied to LLC resonant converters, these methods become very involved and do not always yield the result in a computationally or analytically tractable form.

As an alternative to the analytical approaches, the time-domain simulation method [6,7] was proposed for the resonant converter modeling. In this method, the time-domain simulation is performed with a perturbed input signal, and the output signal at the perturbation frequency is extracted and compared with the input signal. By sweeping the perturbation frequency for the range of interest and recording the ratio between the input and output signals, the Bode plot of the corresponding transfer function is obtained. In this paper, the

Authorized licensed use limited to: NATIONAL YUNLIN UNIV OF TECH. Downloaded on December 11, 2009 at 11:47 from IEEE Xplore. Restrictions apply.

time-domain simulation method is used for theoretical predictions of the converter transfer functions. The resulting transfer functions are then compared and correlated with (1), in order to investigate the converter small-signal dynamics.

C. Power Stage Dynamics

Since the operational region of the given LLC converter covers both Mode 1 and Mode 2, the converter encounters substantial changes in the small-signal dynamics. This change is illustrated in Fig. 4(a), which depicts the pole/zero trajectory of $G_{vf}(s)$, as the operating point travels from Point B in Mode 1 to Point A in Mode 2. At Point B, the transfer function has a complex pole pair, ω_{bt} and ω_{bt}^{*}, originated from the quadratic factor in (1), and low-frequency pole ω_{pl}, stemmed from the output filter stage. The transfer function also has a fixed esr zero, ω_{esr}. As the operating point moves from Point B to Point A in Mode 2, the complex pole pair , ω_{bt} and ω_{bt}^{*}, transforms into two real poles, ω_{sp1} and ω_{sp2}, and the low-frequency pole shifts towards higher frequencies, from ω_{pl} to ω'_{pl}. As illustrated in Fig. 4(a), ω_{sp2} passes ω_{esr} and moves to higher frequencies. On the other hand, ω_{sp1} shifts towards lower frequencies, thus nearing to ω'_{pl}.

Fig. 4(b) shows the Bode plot of the control-to-output transfer function $G_{vc}(s)$, given by a product of the frequency-to-output transfer function $G_{vf}(s)$ and the CCO gain G_{cco}; i.e., $G_{vc}(s) = G_{vf}(s) \cdot G_{cco}$. Fig. 4(b) compares $G_{vc}(s)$ at Point B and Point A. For each operating point, the theoretical predictions, obtained from the time-domain simulation method, are shown in parallel with the experimental measurements.

The Bode plots exhibit a close correlation with the pole trajectory in Fig. 4(a). At Point B in Mode 1, $G_{vc}(s)$ shows a first-order system behavior at frequencies below ω_{esr}. However, at Point A in Mode 2, $G_{vc}(s)$ resembles a second-order system dynamics due to the presence of two neighboring low-frequency poles, ω'_{pl} and ω_{sp1}. In particular, $\angle G_{vc}$ drops to -150° at mid frequencies. Accordingly, Point A presents the worst small-signal dynamics and therefore can be used as the basis for the compensation design. From Fig. 4(b), the location of low-frequency poles, ω'_{pl} and ω_{sp1}, are estimated as $\omega'_{pl} = 5.0 \times 10^3 [r/s]$ and $\omega_{sp1} = 7.0 \times 10^3 [r/s]$.

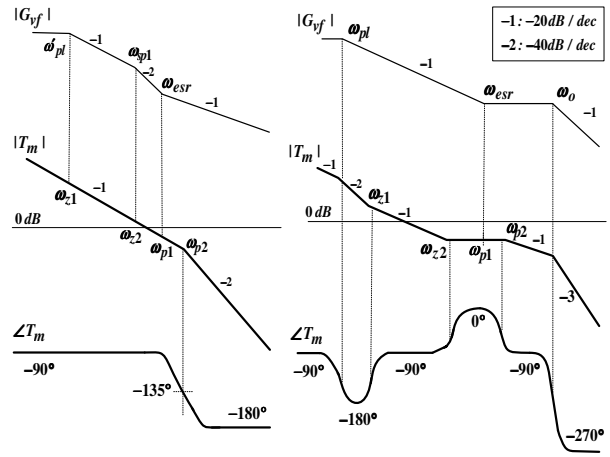

(a) (b)

Fig. 5 Compensation design and loop gain. (a) Compensation design at Point A. (b) Loop gain at Point B. Gvf is the frequency-to-output transfer function and T_m is the loop gain.

D. Optocouper Parameters

There are two parameters that determine the circuit properties of an optocoupler; one is the current transfer ratio (CTR) between the infrared diode and photo transistor and the other is the parasitic capacitance C_j at the collector-emitter junction of the photo transistor. Since these parameters could also vary with the converter operational condition, the actual parameter values at the different operating points should be incorporated into the dynamic analysis. A simple method to measure the values for CTR and C_j is discussed in Appendix.

IV. FEEDBACK COMPENSATION DESIGN

A. Three-Pole Two-Zero Compensation

Considering the $G_{vc}(s)$ at Point A as the basis for the feedback design, a three-pole two-zero circuit is selected for the voltage feedback compensation

$$F_v(s) = \frac{K_m(1+s/\omega_{z1})(1+s/\omega_{z2})}{s(1+s/\omega_{p1})(1+s/\omega_{p2})} \tag{2}$$

Two zeros are employed to compensate for the phase delay caused by the two low-frequency power stage poles. Two poles are used to provide the high-frequency attenuation for the loop gain. Finally, an integrator is used for the dc regulation.

Fig. 5(a) illustrates the voltage feedback compensation design, using $G_{vc}(s)$ and loop gain $T_m(s)$. In Fig. 5(a), the compensation zeros are located at the low-frequency poles, $\omega_{z1} = \omega'_{pl} = 5.0 \times 10^3 [r/s]$ and $\omega_{z2} = \omega_{sp1} = 7.0 \times 10^3 [r/s]$.

Authorized licensed use limited to: NATIONAL YUNLIN UNIV OF TECH. Downloaded on December 11, 2009 at 11:47 from IEEE Xplore. Restrictions apply.

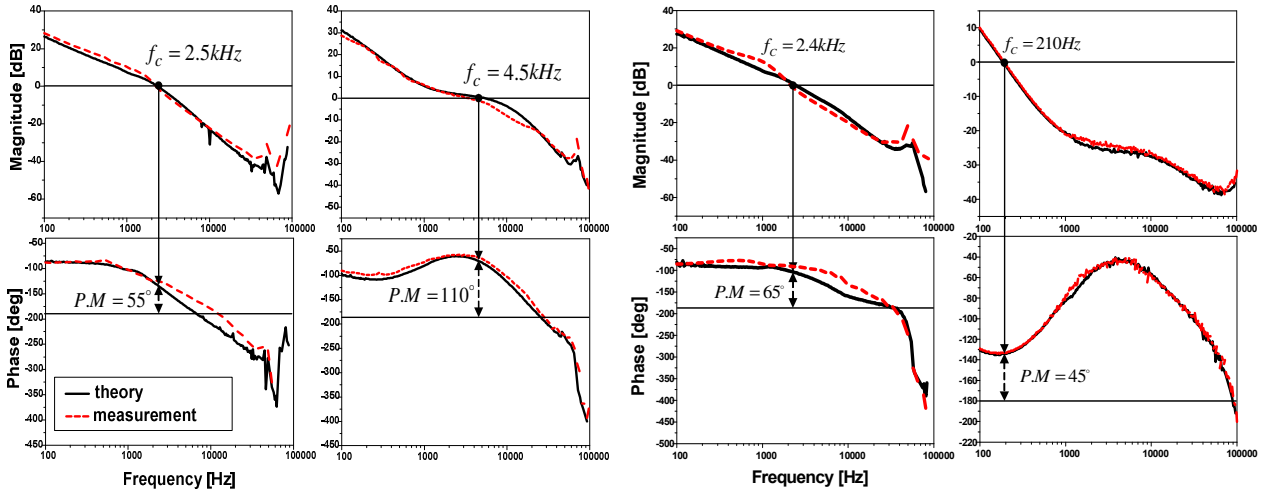

(a) (b) (c) (d)

Fig. 6 Loop gains. (a) Loop gain at Point A. (b) Loop gain at Point B. (c) Loop gain at Point C. (d) Loop gain at Point D.

The first compensation pole is placed at the esr zero, $\omega_{p1} = \omega_{esr} = 10 \times 10^4 [r/s]$, while the second pole is located at $\omega_{p2} = 1.3 \times 10^5 [r/s]$. Finally, the integrator gain is selected as $K_m = 1257$. With these compensation parameters, the loop gain maintains the desirable $-20\,dB/dec$ slope until the loop gain crossover frequency, thereby ensuring stability with sufficient phase margin. The compensation parameters can readily be converted into the circuit components shown in Fig. 1, as illustrated in Appendix.

B. Loop Gain at Mode 2

While the three-pole two-zero compensation provides very desirable loop gain characteristics in Mode 2, it is still necessary to judge the suitability of the compensation in Mode 1.

Fig. 5(b) shows the theoretical prediction for the loop gain at Point B in Mode 1. Due to the change in $G_{vc}(s)$, the loop gain deviates from the previous $-20\,dB/dec$ profile. However, the change does not deteriorate the loop gain characteristics. In particular, the loop gain shows a flat gain between ω_{z2} and ω_{p2}. This in fact would improve the phase characteristics, yielding an enhanced phase margin. Thus, it can be concluded that the feedback compensation, designed for Point A in Mode 2, will still offer satisfactory performance at Point B in Mode 1.

V. CLOSED-LOOP PERFORMANCE

A. Loop Gain

Fig. 6 shows the theoretical loop gain characteristics at Point A, B, C, and D, in comparison with the experimental measurements. The loop gains at Point A and C show a good match with the design target, illustrated in Fig. 5(a). At Point B, the loop gain shows a close correlation with to the theoretical prediction in Fig. 5(b). At Point D, the magnitude of the loop gain is markedly reduced, resulting in a very narrow crossover frequency. This is because the loop gain magnitude, which is proportional to the slope of the voltage gain curve, becomes very small due to the flatness of the voltage gain curve at Point D. Also, the loop gain has the smallest phase margin at Point D. Thus, it is expected that the converter will show the poorest performance at Point D. The performance degradation at Point D will be further discussed in next section.

B. Load Transient Response

Fig. 7 shows the load current change responses at different input voltages. The simulated tank current and output voltage waveforms are presented in parallel with the experiment measurements. Fig. 7(a) shows the transient waveforms in response to the load current change from $I_O = 1A$ to $6A$ at $V_S = 340V$ (From Point C to A), while Fig. 7(b) shows the transient response from $I_O = 1A$

Authorized licensed use limited to: NATIONAL YUNLIN UNIV OF TECH. Downloaded on December 11, 2009 at 11:47 from IEEE Xplore. Restrictions apply.

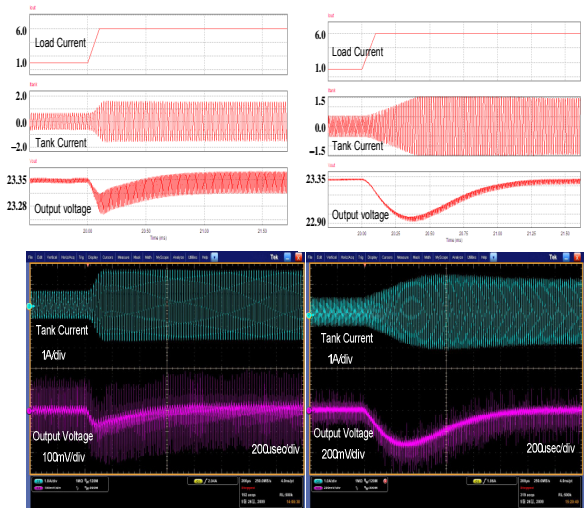

(a) (b)

Fig. 7 Load transient response. (a) From Point C to Point A. (b) From Point D to Point B.

to $6A$ at $V_S = 390V$ (From Point D to B).

While the two cases identically show very stable and well-controlled behavior, there are noticeable differences in the speed and undershoot of the output voltage. At Point C and A, the converter reveals very similar loop gain characteristics with high crossover frequencies. Accordingly, the transition from Point C to A is speedy, producing a fast output voltage response with small undershoot. On the other hand, at Point D, the loop gain has the lowest crossover frequency with much reduced loop gain magnitude. According, the transition from Point D to B is sluggish, yielding a longer response time with lager output voltage undershoot.

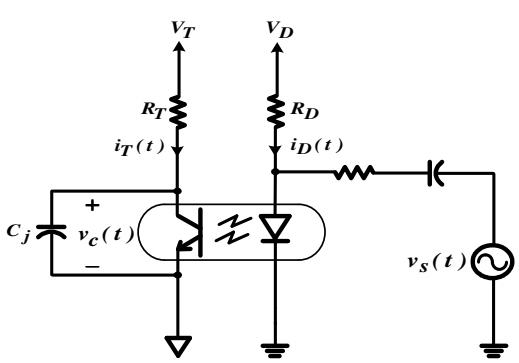

(a)

VI. CONCLUSIONS

This paper addressed theoretical and practical issues involved with the dynamic analysis and control design of LLC resonant converters operating under large line and load variations. It has been demonstrated that a three-pole two-zero compensation, properly designed for the low-line heavy-load condition (Point A), offers stable operation with satisfactory closed-loop performance for the entire operational region. Detailed procedures to obtain such a compensation design have been presented.

The time-domain simulation method, when augmented by the knowledge about the converter dynamics, can be served as an effective and efficient tool for the analysis and design of LLC resonant converters. It is envisaged that the time-domain method would find increasing applications to the dynamic analysis, control design, and performance evaluation of resonant-type dc-to-dc converters in general.

APPENDIX

A1. Measurement of Optocoupler Parameters

Fig. 8(a) shows a simple circuit to measure CTR and C_j of optocouplers. The circuit parameters, R_T, V_T, V_D, and R_D are carefully selected to reproduce the actual operating conditions of the optocoupler in the prototype LLC converter. Under this condition, the ratio $i_T(t)$ to $i_D(t)$ is measured with the small-signal source $v_s(t)$ deactivated, yielding the current transfer ratio, $CTR = I_T / I_D$. Next, the small-signal source $v_s(t)$ is activated and the frequency response of $v_c(j\omega)/v_s(j\omega)$ is recorded. Fig. 8(b) shows an example of such measurements. The transfer function shows the first-order low-pass filter characteristics, whose corner frequency is given by

$$\omega_p = \frac{1}{2\pi R_T C_j} \tag{3}$$

The junction capacitance C_j is now calculated from (3).

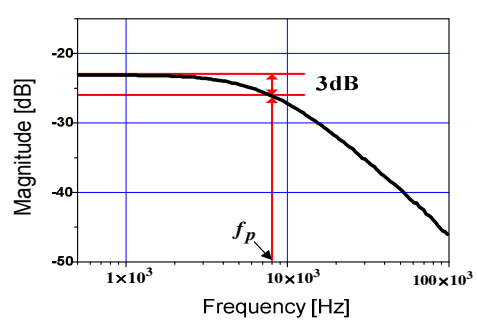

(b)

Fig. 8 Measurement of optocupler parameters. (a) Measurement circuit. (b) Measurement result.

Authorized licensed use limited to: NATIONAL YUNLIN UNIV OF TECH. Downloaded on December 11, 2009 at 11:47 from IEEE Xplore. Restrictions apply.

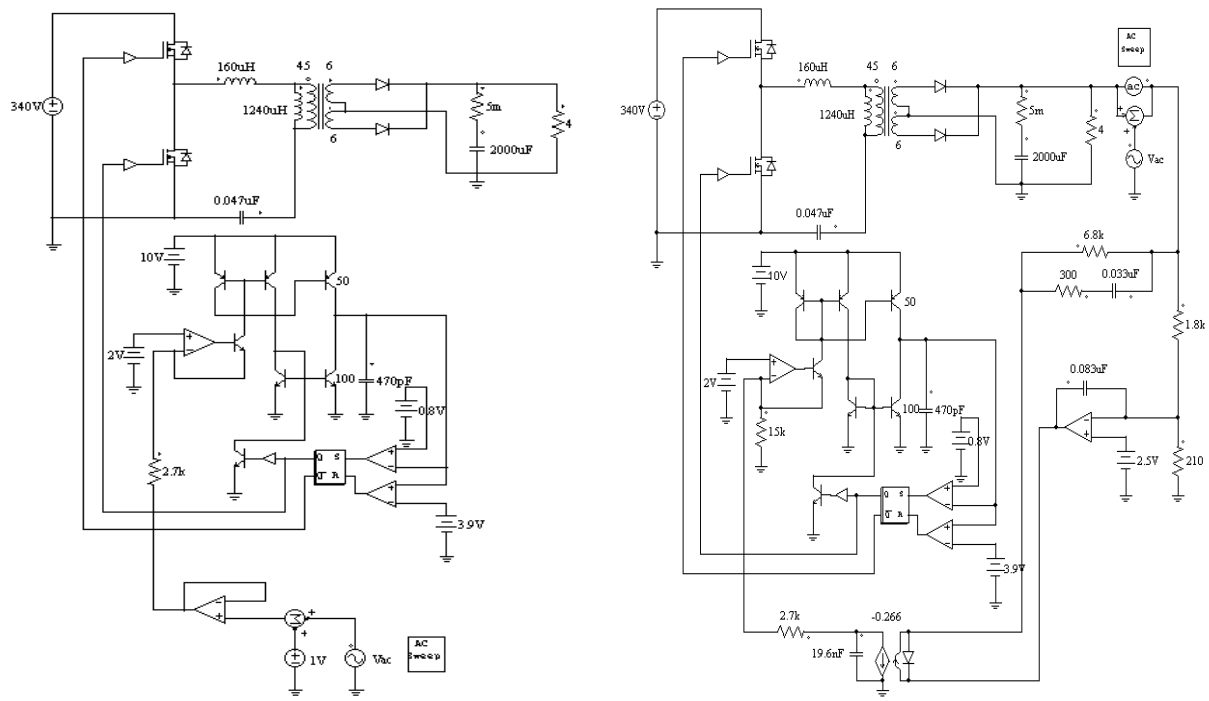

(a) (b)

Fig. 9 Simulation models. (a) Control-to-output simulation model. (b) Loop gain.

For the given LLC converter, the current transfer ratio was measured between $0.15 < CTR < 0.42$, while the junction capacitance was measured between $4.7\,nF < C_j < 9.4\,nF$ for the given operating conditions.

A2. PSIM Models for Time-Domain Simulation

Fig. 9 shows the circuit models used for time-domain simulations to extract the small-signal transfer functions of the LLC converter. The models are constructed using PSIM software [12]. Fig. 9(a) is the circuit model for the control-to-output transfer function evaluation and Fig. 9(b) is the circuit model for the loop gain simulation.

A3. Voltage Feedback Compensation Circuit

Fig. 10 shows the voltage feedback compensation built using a shunt regulator-type error amplifier and optocoupler. From the circuit diagram, the circuit equation between the small-signal output voltage $\hat{v}_o(s)$ and diode current $\hat{i}_d(s)$ is given by

$$\hat{i}_d(s) = \frac{\hat{v}_o(s) - \left(-\frac{Z_2(s)}{Z_1(s)} \cdot v_o(s)\right)}{Z_3(s)} \tag{4}$$

where $Z_1(s) = R_4$, $Z_3(s) = \left(R_2 + 1/(sC_2)\right) \| R_1$, and $Z_2(s) = 1/(sC_1)$. Equation (4) is rewritten as

$$\frac{\hat{i}_d(s)}{v_o(s)} = \frac{\left(1 + sC_1R_4\right)\left(1 + sC_2\left(R_2 + R_1\right)\right)}{sR_4C_1R_1\left(1 + sR_2C_2\right)} \tag{5}$$

On the other hand, the relationship between $\hat{i}_t(s)$ and $\hat{v}_c(s)$ is given by

$$\frac{\hat{v}_c(s)}{\hat{i}_t(s)} = \frac{R_3}{1 + sR_3C_j} \tag{6}$$

The voltage feedback compensation is defined as

$$\frac{\hat{v}_c(s)}{v_o(s)} = \frac{\hat{i}_d(s)}{\hat{v}_o(s)} \frac{\hat{i}_t(s)}{\hat{i}_d(s)} \frac{\hat{v}_c(s)}{\hat{i}_t(s)} \tag{7}$$

By incorporating (5)-(7) into (7) and using the fact that $\hat{i}_t(s)/\hat{i}_d(s) = CTR$, the expression for the voltage feedback compensation is given by

$$F_v(s) = \frac{k_m(1 + s/\omega_{z1})(1 + s/\omega_{z2})}{s(1 + s/\omega_{p1})(1 + s/\omega_{p2})} \tag{8}$$

Authorized licensed use limited to: NATIONAL YUNLIN UNIV OF TECH. Downloaded on December 11, 2009 at 11:47 from IEEE Xplore. Restrictions apply.

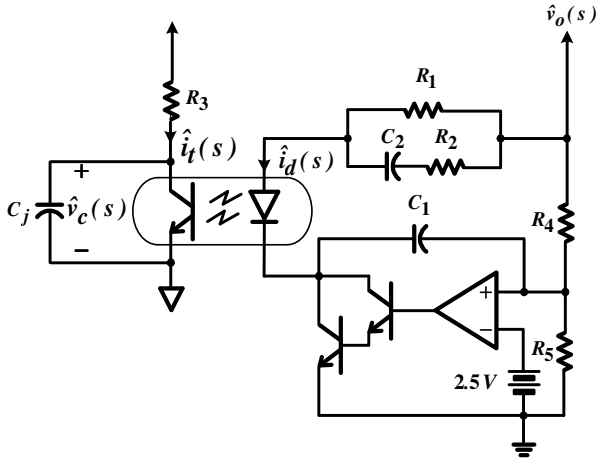

Fig. 10 Three-pole two-zero compensation circuit.

with $K_m = CTR/(R_1C_1R_4)$, $\omega_{z1} = 1/((R_1+R_2)C_2)$, $\omega_{z2} = 1/(R_4C_1)$, $\omega_{p1} = 1/(R_2C_2)$, and $\omega_{p2} = 1/(R_3C_j)$. In the prototype LLC converter, R_1 is selected to provide an appropriate bias current for the infrared diode and the other compensation circuit parameters are designed using (8). On the other hand, R_5 is determined for the output voltage regulation at $V_O = 24\,V$.

References

[1] J.F. Lazar and R. Martinelli, "Steady-state analysis of the LLC series resonant converter," APEC2001, pp.728-735.

[2] Bo Yang, F. C. Lee, A.J. Zhang, and Guisong Huang, "LLC resonant converter for front end DC/DC conversion," APEC2002, pp.1108-1112.

[3] B. Lu, W. Liu, Y. Liang, F.C. Lee, J.D. Van Wyk, "Optimal design methodology for LLC resonant converter," APEC2006, pp.533-538.

[4] H. Choi, "Analysis and design of LLC resonant converter with integrated transformer," APEC2007, pp.1630-1635.

[5] V. Vorperian, "Approximate small-signal analysis of the series and the parallel resonant converters," IEEE Trans. Power Electron., vol. 4, pp 15-24. Jan. 1989.

[6] Bo Yang and F.C. Lee, "Small-signal analysis for LLC resonant converter," CPES Seminar, 2003, S7.3 pp.144-149.

[7] Bo Yang, "Topology investigation for front end DC/DC Power Conversion for Distributed Power Systems," Dissertation, Virginia Polytechnic Institute and State University, 2003.

[8] J. M. Noworolski and S. R. Sanders, "Generalized in=place averaging," APEC 1991, pp. 445-451.

[9] S.R. Sanders, J. M. Noworoski, X.Z. Liu, and G. C. Verhese, "Generalized averaging method for power conversion circuits," IEEE Trans. Power Electron., vol. 6, pp.251-259, Apr. 1991.

[10] Eric X. Yang, "Extended describing function method for small signal modeling of resonant and multi resonant converters," Dissertation, Virginia Polytechnic Institute and State University 1994.

[11] E. X. Yang, F.C. Lee, and M. M. Jovanovic, "Small-signal modeling of LCC resonant converters," PESC1992, pp.167-178.

[12] PSIM User's Guide, Powersim Inc, Version 7.0, Mar. 2006.

Authorized licensed use limited to: NATIONAL YUNLIN UNIV OF TECH. Downloaded on December 11, 2009 at 11:47 from IEEE Xplore. Restrictions apply.